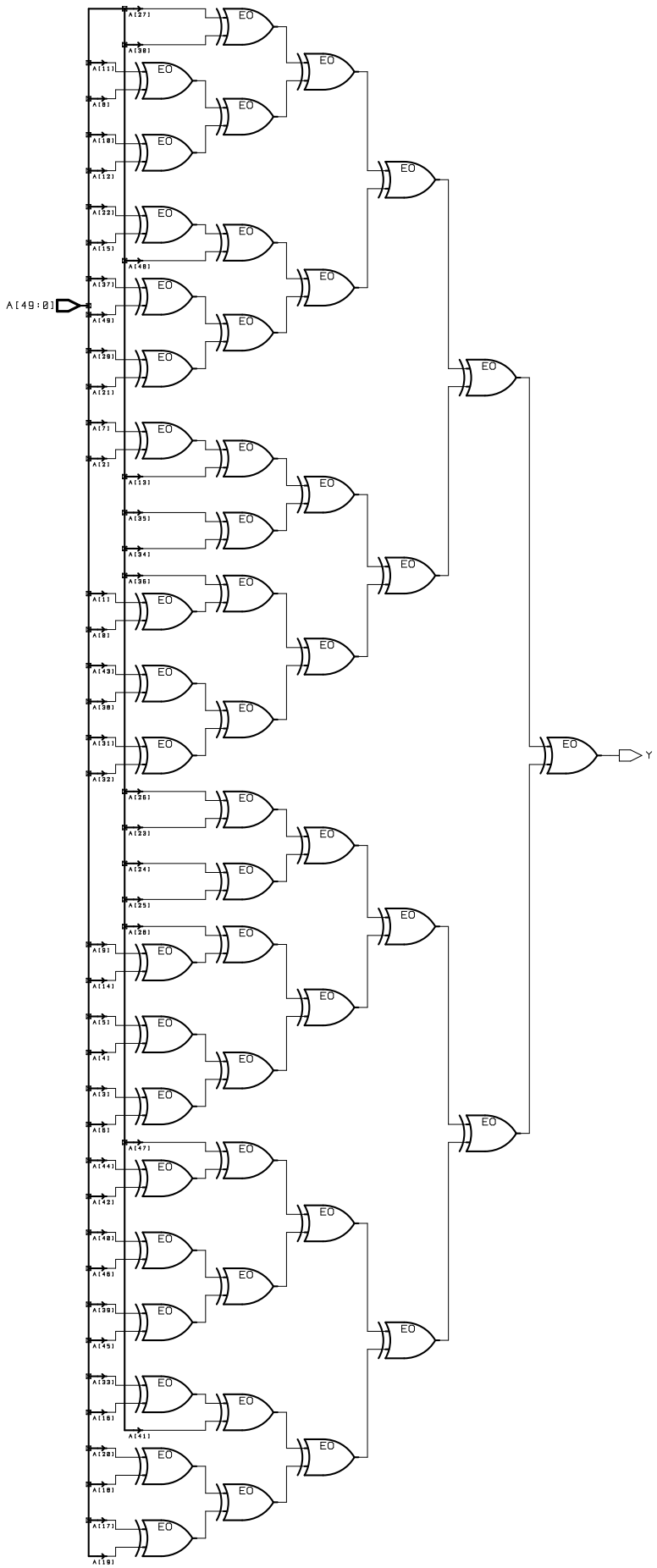

design: PARITY	designer: Tom Wada	date: 9/14/99
technology: class	company: Univ. of the Ryukyus	sheet: 1 of 1