社団法人 電子情報通信学会
THE INSTITUTE OF ELECTRONICS,
INFORMATION AND COMMUNICATION ENGINEERS

信学技報
TECHNICAL REPORT OF IEICE

[技術展示]The Development of Terrestrial Digital TV Broadcasting dedicated Software-based Adaptive Array Antenna System

Dang Hai PHAM[1] Hirokazu Asato[2] Takanobu Tabata[3] Satoshi Hori[3]
Shuji Murakami[2] Tomohisha WADA[1]

[1]Faculty of Information Engineering, University of the Ryukyus 1Senbaru Nishihara, Okinawa, 903-0129 Japan
[2]Magna Design Net Inc. 1831-1 Oroku Naha, Okinawa, 901-0152 Japan
[3]Kojima Press Industry Co., Ltd. 15 Hirokuden, Ukigai, Miyoshi-cho, Nishikamo-gun, Aichi, 470-0207 Japan
E-mail: [1]phdang@lsi.ie.u-ryukyu.ac.jp, wada@ie.u-ryukyu.ac.jp

Abstract Software-Defined Radio is a quite attractive field of research since it can reduce time-consuming prototype development time from research themes. In this research, we develop the software-based adaptive array antenna system for ISDB-T reception. Software-based adaptive beam-forming and/or null-steering algorithms (e.g. Maximum Ratio Combining -MRC, Sample Matrix Inversion -SMI) are reconfigured in DSP board and are subject of this research. Coware Signal Processing Worksystem (SPW) is used as system design tool that is able to fully integrate from algorithm design to hardware implementation and multi-language co-simulation (e.g. C-language and VerilogHDL).

Keyword Software-define Radio, array antenna, DSP, FPGA, ISDB-T

[技術展示]地上デジタル放送対応ソフトウエア アダプティブアレイアンテナシステムの開発

ダン ハイ パム[1] 安里博一[2] 田端隆伸[3] 堀 智[3] 村上修二[2] 和田知久[1]

[1]琉球大学理工学研究科 〒903-0219 沖縄県中頭郡西原町千原 1 番地
[2]株式会社マグナデザインネット 〒901-0152 沖縄県那覇市小禄 1831 番地 1
[3]小島プレス工業株式会社 〒470-0207 愛知県西加茂郡三好町大字福谷字広久伝 15 番地
E-mail: [1]phdang@lsi.ie.u-ryukyu.ac.jp, wada@ie.u-ryukyu.ac.jp

あらまし ソフトウエアラジオシステムは複雑な無線信号処理研究のプロトタイプの時間を大幅に削減することを可能とするので、システムのアーキテクチャは重要な研究要素である。本論文では、地上デジタル放送 ISDB-T 対応の適応アレイアンテナシステムのアルゴリズム開発のために、プロセッサによるソフトウエア処理でアレイアンテナ信号処理アルゴリズムを構築可能なシステムを開発した。ビームフォーミングやヌルステアリング処理をCベースのソフトウエアで構築できる。システム設計には Coware 社の Signal Processing Worksystem (SPW)を用い、ハードウエアとソフトウエアのコシミュレーションにより、アルゴリズムからH／Wまでの開発・検証を行なった。

キーワード ソフトウエアラジオ、アレイアンテナ、DSP、FPGA、 ISDB-T

1. Introduction

For wideband broadcasting system, such as ISDB-T, multipath fading caused by many reflected signals seriously deteriorates the quality of digital communication. Software antenna as the particular aspect of Software-Defined Radio (SDR) is receiving enormous attention as the promising solution to realize high bandwidth wireless communication systems. By using SDR technology it may become possible to implement signal processing radio functions by software running in general-purpose micro-processor.

Software antenna is inherently matched with software-defined radio (SDR) and is subject of this research. In this paper, we introduce the development of software-based adaptive array antenna system for ISDB-T reception system. By exploiting merits of SDR,

adaptive beamforming/ null-steering algorithms are embedded in DSP board and are reconfigurable. The concept of software-based adaptive array antenna and its algorithms are given in Sect.2. Then, the development by joint hardware-software solution is presented in Sect.3. Finally, by assuming propagation condition, performance of software-base adaptive array antenna in term of beam-forming and interference suppressing is demonstrated.

2. Software-based adaptive array antenna system and its algorithms

Software antenna has been proposed to provide an effective means to cope with time-varying severe propagation environment by selecting optimum algorithm continually. Ideally, with configuration of array antenna, and by performing signal processing which overcomes the limitation of each individual algorithm, it could adapt to the existing environment at anytime. In [1], Karasawa *et. al.* is refined the concept of software antenna and provided the overview of selections of "algorithm diversity" that are equivalent to individual scenario of radio environment.

In this project, we develop the software-based adaptive array antenna for ISDB-T reception to study digital beamforming algorithms. Among enormous methods to implement software antenna for OFDM reception, digital beamforming algorithms in time domain is chose to implement in order to reduce the hardware costs. Moreover, since ISDB-T receiving system has been developed and refined in past years, this method ensures the flexibility and minor effort to connect with our existent system.

Figure 1 illustrates the time-domain beamforming algorithm. By exploiting the periodic property of OFDM signal, i.e. the header of OFDM signal is copied of the tail OFDM signal itself, the header and tail of OFDM signal are used to calculating the coefficients of software antenna, which is thoroughly explained in [2].

Suppose that array antenna is equipped with M element antenna. Hence, the received signals are expressed as followed

$$\mathbf{X}(t) = \left[x_1(t) \quad x_2(t) \ldots x_M(t)\right]^T$$

where $[.]^T$ denotes the transpose of the matrix.

The output signal of array antenna that is fed to OFDM demodulation system is defined as

$$\mathbf{Y} = \mathbf{W}^H \mathbf{X}$$

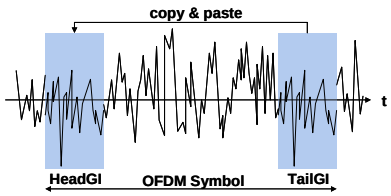

Fig.1: Principle of beamforming/null-steering algorithm in time-domain

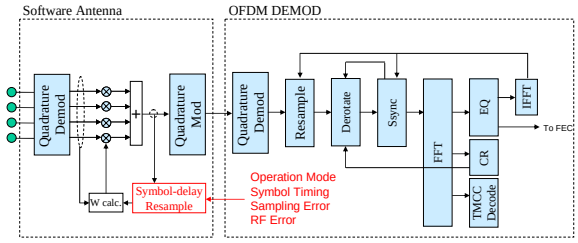

Fig.2 Block diagram of software antenna in concatenation with OFDM reception system

where $\mathbf{W} = \left[w_1 \quad w_2 \ldots w_M\right]^T$ is coefficient vector of array antenna.

Let assume that OFDM signal is destructed by interference and thus the periodic property of header and tail part of OFDM signal is destroyed. In other words, correlation between header and tail part of OFDM signals is reduced. Thus, by using tail part of output signal as reference signal, we will weight each branch of array antenna and combine together in order to maximize the correlation between headers of inputs and tail part of output of OFDM signal.

Coefficients of digital beamforming is calculated by MRC algorithm as followed [3]

$$\mathbf{W}_{MRC} = \mathrm{r}_{xy} = \mathrm{E}\left[\mathbf{X}\mathbf{Y}^H\right]$$

In addition, the digital null-steering algorithm (SMI) is also supported in order to overcome the limitation of MRC algorithm in severe propagation environment in which the strong interference is dominant. Coefficients of digital beamforming is calculated by SMI algorithm as followed

$$\mathbf{W}_{SMI} = \mathrm{R}_{xx}^{-1}\,\mathrm{r}_{xy}$$

where R_{xx} is correlation matrix of received signals, r_{xy} is cross-correlation between received signals and output of array antenna.

The implementation of Software-based Adaptive Array Antenna System is shown in Fig.2. Four-branches of array

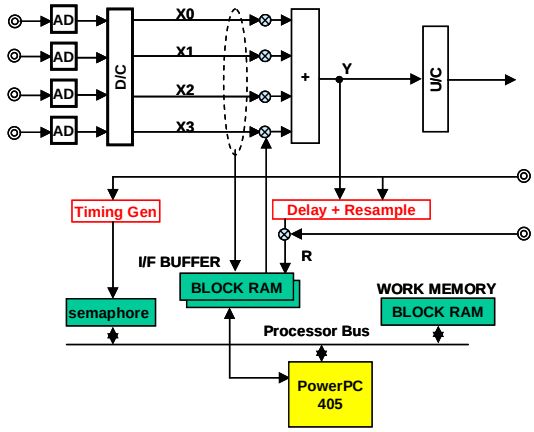

Fig.3: Functional Block diagram of Adaptive Array Antenna

antenna is firstly analog-to-digital converted. Samples of headers of four-branches are then stored in block RAM of DSP board. The tail part of output signal is also stored in block RAM as reference signal. DSP microprocessor uses these data to generate the coefficient for the next OFDM symbol. Hence, four-branches of array antenna are weighted and combined together. The output signal of array antenna is fed to OFDM demodulation system which is previously implemented by FPGA board. In OFDM demodulation system, starting point of OFDM signal and operation mode in ISDB-T standard are determined by synchronization block. Signal is then fed to FFT block and is converted in to frequency domain. Equalizer is used to reverse the distortion caused by multipath channel. Consequentially, data is passed to FEC to achieve the transmitted data.

To successfully extract header and tail parts of OFDM signal, the information of starting point of OFDM signal and the operation mode are necessary at the array antenna and are provided from OFDM demodulation system. Note that signals of four-braches inherently contain the RF frequency error. Additionally, sampling error is also occurred due to the clock difference between transmitter and receiver. Since adaptive beamforming algorithm rely on correlation estimation, performance of adaptive array antenna is severely degraded by these errors. Therefore, in our design, these estimations of sampling error and RF error are also provided to eliminate their effects to operation of adaptive array antenna.

In the next section, our development of software-based adaptive array antenna system will be discussed in detail.

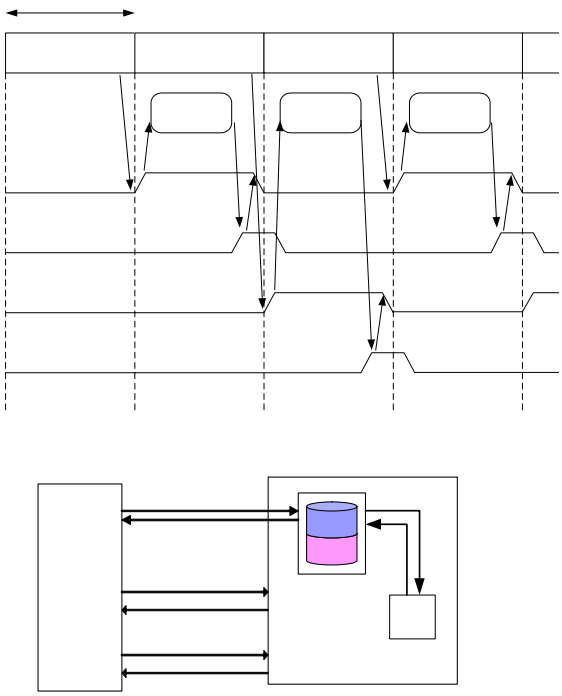

Fig.4 Timing diagram and HW-SW interface of Adaptive Array Antenna

3. Implementation of Software-based Adaptive Array Antenna System

In this section, the development of adaptive array antenna is discussed in conjunction with OFDM demodulation system. Fig.3 shows the functional block diagram of array antenna. Our design compromises of hardware (HW) and software (SW) solution. HW side provides the prefixed function of array antenna, which includes 4 tuners, 4-multiplies for 4 branches and combination. It also has responsibility of controlling read/write memory and timing in SW side. In contrast, SW side provides a flexible function corresponding to adaptive beamforming algorithm. In our development, we decided to implement two types of adaptive beamforming/null-steering algorithms that are Maximum Ratio Combining (MRC) and Sample Matrix Inversion (SMI). In system design point of view, the joint HW-SW solution simplifies the design task and yet ensures the flexibility for further development.

In detail, signals coming from 4-branch array antenna are first converted to 8MHz IF and are AD converted to digital signal. Using the information of starting point of OFDM symbol provided by OFDM demodulation, samples of header of incoming signals and tail of output signal are extracted and are fed to DSP board. The compensations

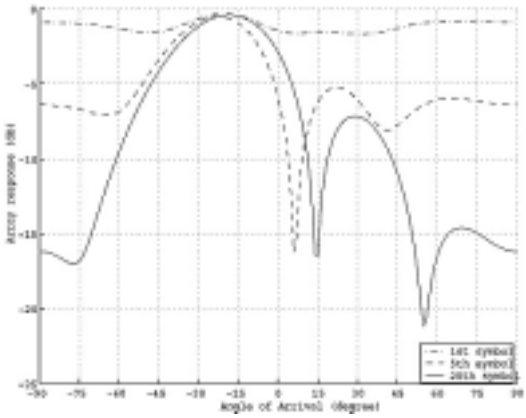

Fig.5 Beam-pattern of SMI algorithm in case of D/U=0dB

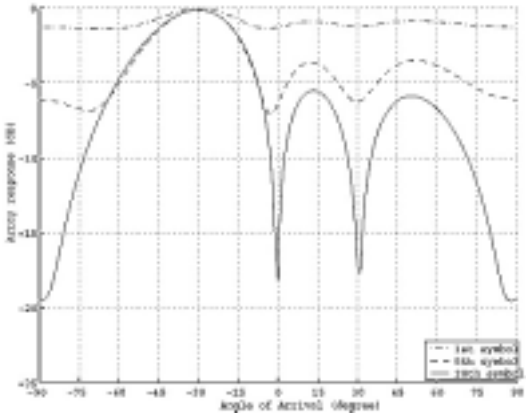

Fig.6 Beam-pattern of MRC algorithm in case of D/U=6dB

for sampling error and RF error are conducted in HW side as mentioned above. It also provides timing to DSP board which is used to operate microprocessor. Finally, coefficients generated by DSP board are used to weight and combine 4 braches of array antenna.

In SW side, there are two banks of block memory to store samples of 2 successive OFDM symbols. The read/write memory process is controlled by HW. Using these samples, microprocessor performs specific adaptive beamforming algorithm. Coefficients are then stored into corresponding memory bank and are provided to HW side in the start of next OFDM symbol.

Fig.4 is shown the timing diagram of our HW-SW

Table 1. Simulation Parameters

Number of element	4
Distant	Half-wavelength
AOA of Desired signal	30deg
AOA of Undesired signal	-75deg, 15deg, 60deg
OFDM Transmission	Mode3 of ISDB-T 8k FFT GI=1/8

Fig.7 Implementation of Adaptive Array Antenna

solution and its interface. As mentioned before, we use two banks of memory in DSP board to realize the real-time operating of adaptive array antenna. The operation of DSP board as SW side is controlled by HW side via 2-pair of request-acknowledgment corresponding to 2 banks of memory. As illustrated in timing diagram, samples are firstly stored to bank#0, and then the request signal coming from HW side indicates the availability of data and starts the operation of microprocessor. Samples of next OFDM symbol are stored to bank#1 simultaneously with operation of microprocessor with bank#0. After finishing, the acknowledgment signal informs HW side and coefficients are stored back into corresponding memory bank. In next symbol, HW side archives the coefficients form DSP board. Microprocessor sequentially performs adaptive beamforming algorithm with bank#1 simultaneously with process of storing samples to bank#0, and so on.

In next section, simulation environment of adaptive array antenna system and its results are given in detail.

4. Simulation Results

In our project, Coware Signal Processing Worksystem (SPW) is used as the system developing environment. It creates a powerful and robust environment for meeting the demands of today's DSP designers. By providing a smooth path from system-level design and verification to implementation, SPW offers an effective bridge from system concept to hardware realization. The unique feature of SPW is that it integrally allows multiple language flexibility, e.g. VHDL, Verilog, C/C++, Matlab etc. Therefore, using SPW, we can implement this system (both HW and SW side) in the single design and verifies its operation in co-simulation environment.

In order to demonstrate the effect of adaptive

beamforming/null-steering algorithm, we made a simulation with SPW. The condition and simulation method is given below.

A $\lambda/2$ -spaced 4-element linear array is adopted. Signals from 2 independent sources, one is for desired signal, the other is for interference signal is coming to antenna after separating to three paths having different delays. OFDM system operates in Mode 3 of ISDB-T standard.

Fig.5 shows beam-pattern generated by adaptive array antenna in case of SMI algorithm. Deep-nulls locating at the angle of arrive (AOA) of interferences demonstrates feature of interference suppression. In contrast, Fig.6 shows beam-pattern generated by MRC algorithm. As shown in this figure, it emphasizes the desired signal by steering the main beam to AOA of desired signal. Therefore one can expect that SMI algorithm outperforms MRC in case of severe interference environment. Otherwise, in relatively weak interference environment, i.e. co-channel interference is weak that can be neglected, MRC is more suitable beamforming algorithm.

Finally, the implementation of adaptive array antenna system is illustrated in Fig.7. It includes dedicated 4-branch tuner, DSP board embedded software-based adaptive beamforming/null-steering algorithm and FPGA board as OFDM demodulation system.

5. Conclusions

In this paper, the software-based adaptive array antenna system for ISDB-T reception system is presented. Two types of adaptive array antenna algorithms are supported in order to overcome limitation of each algorithm in different type of propagation environment. Simulation results show that the strong co-channel interference is suppressed by our system. In relatively weak interference environment, i.e. co-channel interference is weak that can be neglected; MRC is more suitable beamforming algorithm.

Our solution has been implemented in DSP board in concatenation with OFDM demodulation system as illustrated in Fig.7.

Acknowledgment

We thank Prof. Nobuyoshi Kikuma at Nagoya Institute of Technology and Associate Prof. Mitoshi Fujimoto at University of Fukui for the discussion on the Adaptive Array architecture and algorithms.

References

[1] Y. Karasawa, Y. Kamiyama, “Algorithm Diversity in a Software Antenna”, IEIEC Trans. Comm. Vol.E83-B, No.6, June 2000.

[2] S.Hori, N.Kikuma, T.Wada, M.Fujimoto, “Experimental study on Array Beam Forming utilizing the Guard Interval in OFDM,“ to be presented in International Symposium on Antennas and Propagation (ISAP05) , Aug.,2005

[3] S. Sakaguchi, M. Hori, S. Murakami, K. Sanda, N. Itoh, “An adaptive Array Direction Control LSI for Mobile Digital HDTV Receivers”, International Conference on Consumer Electronics (ICCE2005), Las Vegas, Jan., 2005